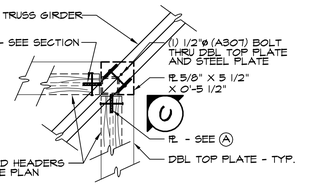

(B) DETAIL NTS

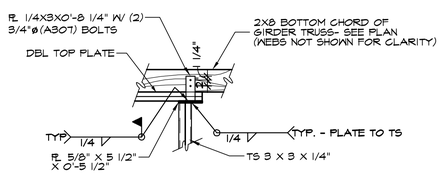

(C) ELEVATION 1/2"=1'-0"

* HEADERS NOT SHOWN FOR CLARITY

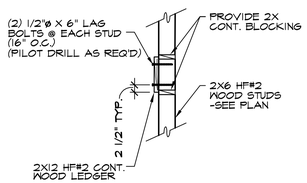

(D) LEDGER DETAIL 1/2"=1'-0"

* JOISTS NOT SHOWN FOR CLARITY - SEE PLAN

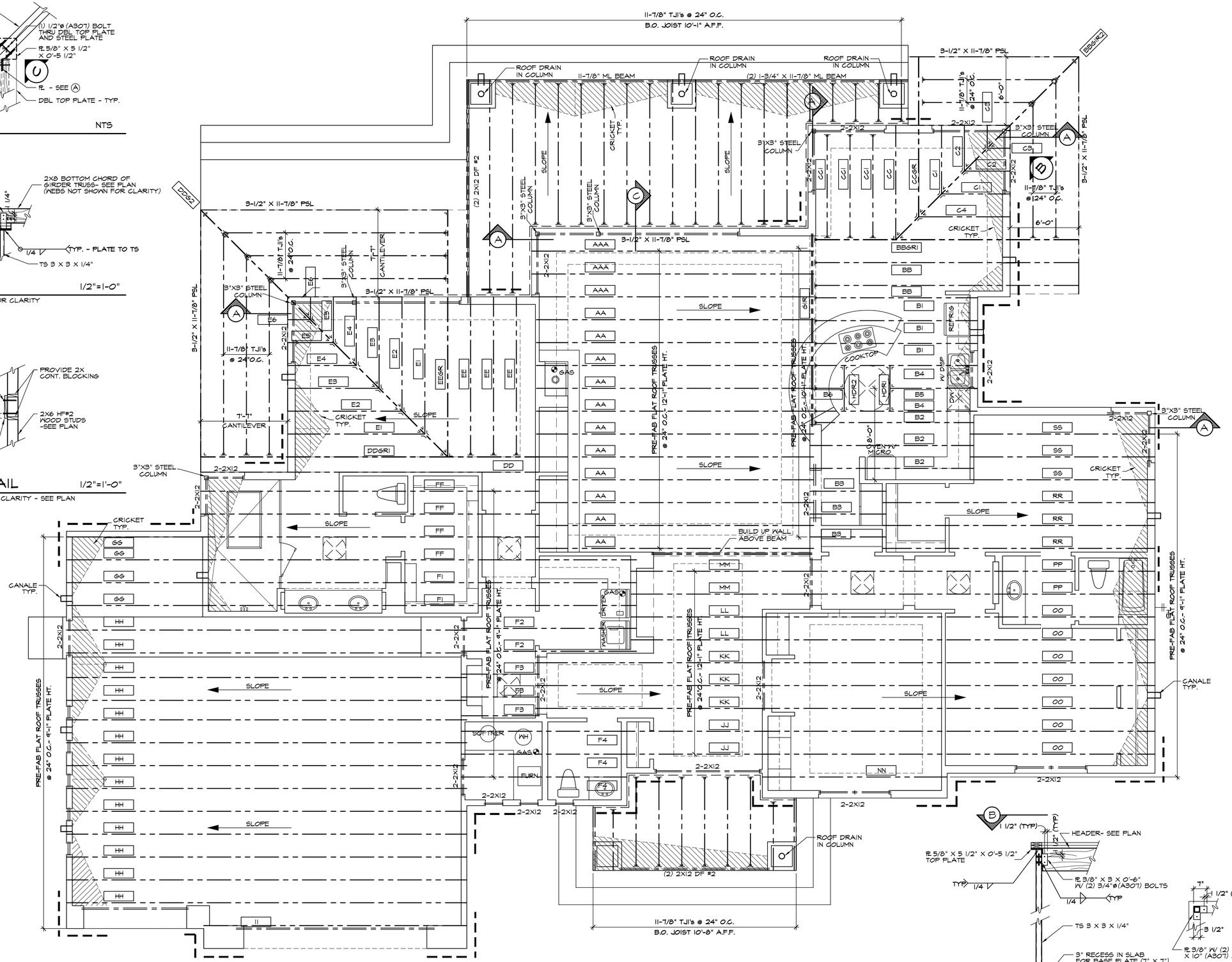

ROOF FRAME PLAN 1/4"=1'-0"

DENOTES
WALL BRACING
1/2" GYP. BOARD SHEATHING W/ 7/16" OSB SHEATHING @ CORNERS AND EVERY LINEAR 25'-0" (LESS THAN 24" USE 1/2" APA RATED WOOD SHEATHING)

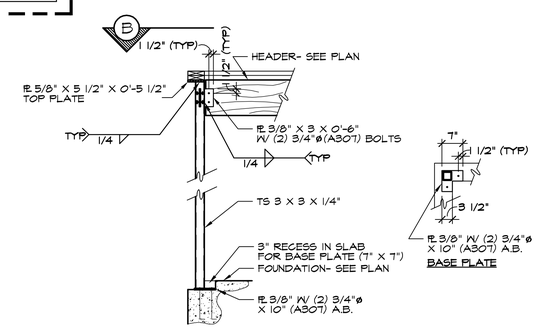

(A) ELEVATION OF CORNER COLUMN 1/2"=1'-0"

AREA	SF
HEATED	3333
GARAGE	1036
COVERED PORCH	107
COVERED PATIO	1023
TOTAL	5519

JOHN KALTENBACH HOMES
P.O. BOX 23114
ALBUQUERQUE, NM 87154
WWW.JKBHOMES.COM
(505) 856-8515 phone
(505) 856-8516 fax
john@jkbhomes.com e-mail

REVISIONS

DATE: 5/16/05

ROOF PLAN

CUSTOM

Eagle Drafting & Design
Custom Design for Custom Homes
3540-C East Tabo Dr.
Las Cruces, New Mexico 88011
(505) 523-5179

SHEET 5