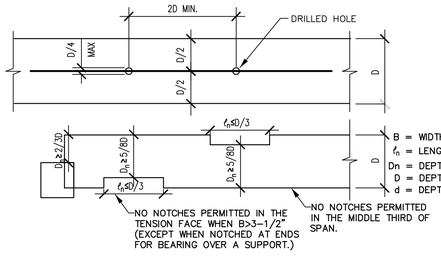

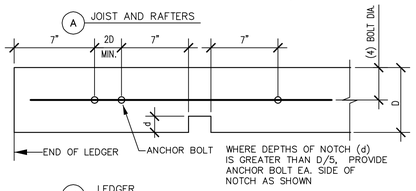

HOLES AND NOTCHES

NTS

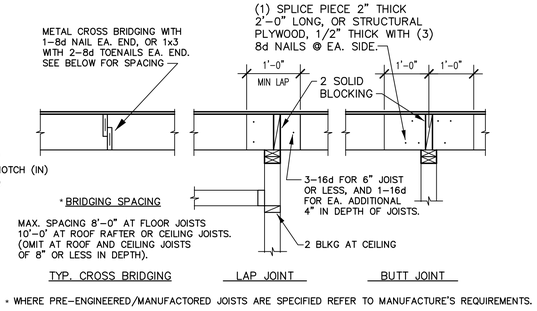

* WHERE PRE-ENGINEERED/MANUFACTORED JOISTS ARE SPECIFIED REFER TO MANUFACTURE'S REQUIREMENTS.

JOIST AND RAFTER LAP @ SUPPORTS

NTS

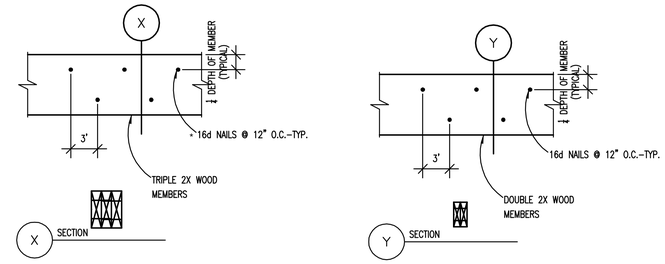

* PROVIDE 1/2"ø BOLTS WHERE REQ.'D BY BUILDING OFFICAL

TYP. BUILT-UP WOOD MEMBERS

NTS

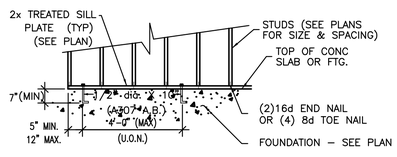

NOTE :
1. PROVIDE (2) BOLTS MIN. PER SILL PIECE.
2. SEE PLANS FOR SIZE AND SPACING OF ANCHOR BOLTS AT SHEARWALLS.
3. PROVIDE ANCHOR BOLTS AT ALL PERIMETER WALLS AND SHEARWALLS.

TYP. ANCHOR BOLT SIZE AND LAYOUT @ FOUNDATION LEVEL

NTS

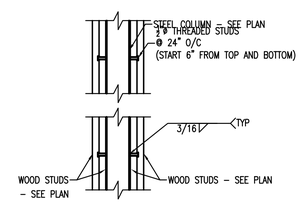

WOOD STUDS @ STEEL COLUMN

NTS

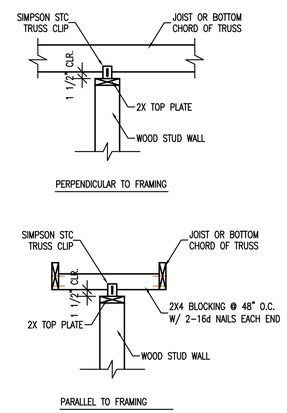

WOOD STUDS @ NON-LOAD BEARING WALLS

NTS

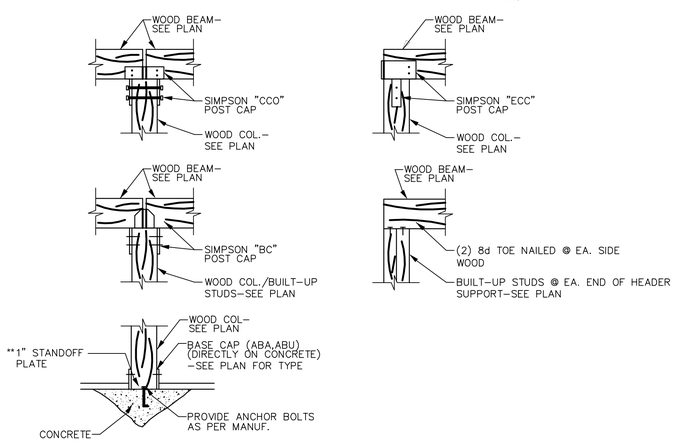

* ANCHOR BOLT OPTIONS-
- DRILLED/EPOXY ANCHOR
- EXPANSION ANCHOR

** MAY REQUIRE TO BE FILLED W/ NON-SHRINK GROUT BETWEEN STANDOFF PLATE AND CONCRETE-REFER TO PLANS

TYP. WOOD COLUMN POSTCAP/BASE CONN. CONDITIONS

(CAP/BASE)

NTS

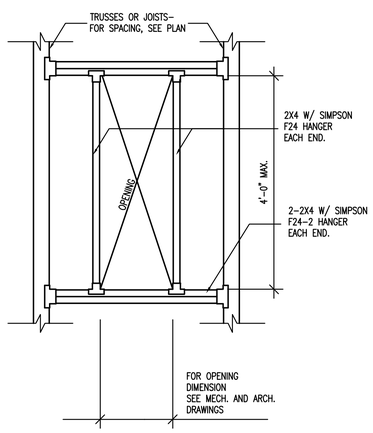

TYP. FRAMING OF SMALL OPENINGS BETWEEN TRUSSES / JOISTS

NTS

JOHN KALTENBACH HOMES
P.O. BOX 21114
ALBUQUERQUE, NM 87154
(505)856-6533 phone
(505)856-3555 fax
jkaltenbachhomes@msn.com (e-mail)
WWW.JKALTENBACHHOMES.COM

GENERAL WOOD DETAILS

REVISIONS 7/8/05

DATE: 5/16/05

CUSTOM

Eagle Drafting & Design
Contact Person: Nick Lombardo, Sr. Residential Designer
Residential Design
Albuquerque, New Mexico 87111
(Day) 505-820-3785

SHEET D2